NSW HFG STANDARD COMPONENTS

Room Layout Sheet

Room Name **Staff Station, 5m2**

RLS Room Code **SSTN-5**

RDS Room Code SSTN-5

AS	ADJUSTABLE SHELF
CAC	CABLE ACCESS CAP
CG	CORNER GUARD
COM/2	COMMUNICATION OUTLET-DOUBLE
GPO/2	GENERAL PURPOSE OUTLET/ DOUBLE
DA	DURESS ALARM
LVP	LAMINATED VERTICAL SUPPORT PANEL
LS/P	LIGHT SWITCH-PELMET TASK LIGHTING
MGP	MEDICAL GAS PANEL
NC	NURSE CALL
PB	PINBOARD
V1	VINYL FLOORING, STANDARD

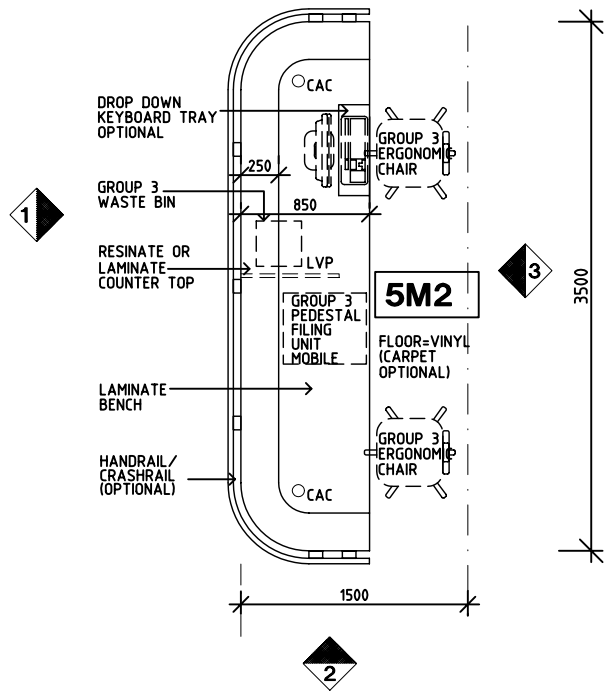

PLAN

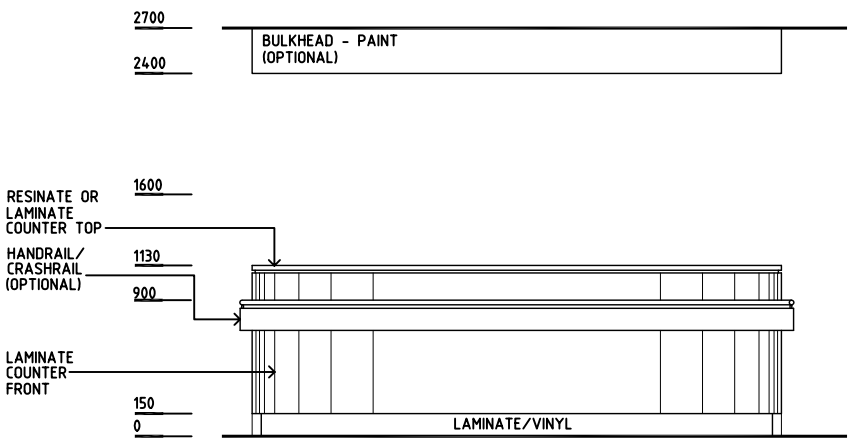

ELEVATION 1

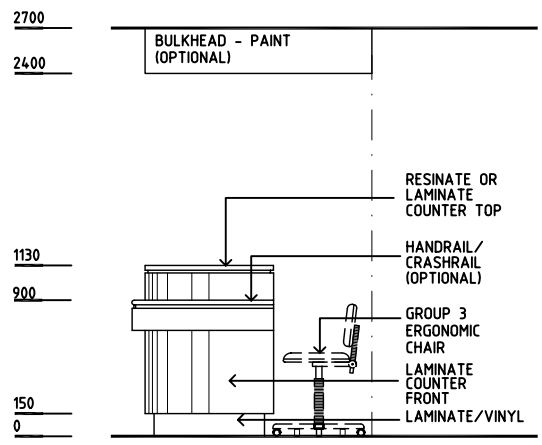

ELEVATION 2

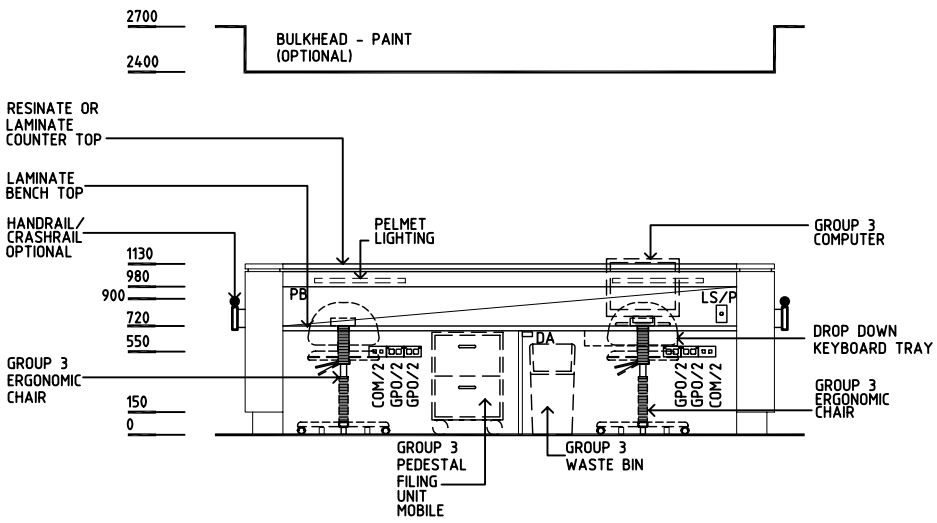

ELEVATION 3

REV	DESCRIPTION	DATE	BY	REV	DESCRIPTION	DATE	BY	REV	DESCRIPTION	DATE	BY
1	FIRST ISSUE	18.7.05	BJ								

NSW HEALTH

THE UNIVERSITY OF NEW SOUTH WALES

HPI

DESIGNED	APPROVED	SCALE(S)	ZONE(S)
AL/BJ	DB	1:50 in A3	

CAD FILE NAME SSTN-5

PAPER DRAWING ID SSTN-5