NSW HFG STANDARD COMPONENTS

Room Layout Sheet

Room Name **Ensuite - Inboard**

RLS Room Code **ENS-ST-A**

RDS Room Code ENS-ST

CH	CATHETER HOOK
COH	COAT HOOK
CP	CHROME PLATED
DHT	DISPENSER - HAND TOWEL
DP	DOOR AND DOOR FRAME PROTECTION
DS	DISPENSER - SOAP
DTP	DISPENSER - TOILET PAPER
EC	EMERGENCY CALL
FW	FLOOR WASTE
GPO/2	GENERAL POWER OUTLET, DOUBLE
GR	GRAB RAIL
IV	IV HOOK
LS	LIGHT SWITCH
NA	NURSE ASSIST CALL
NC	PATIENT NURSE CALL
RCD	RESIDUAL CURRENT DEVICE
S/SH	SOAP AND SHAMPOO HOLDER
TR	TOWEL RAIL

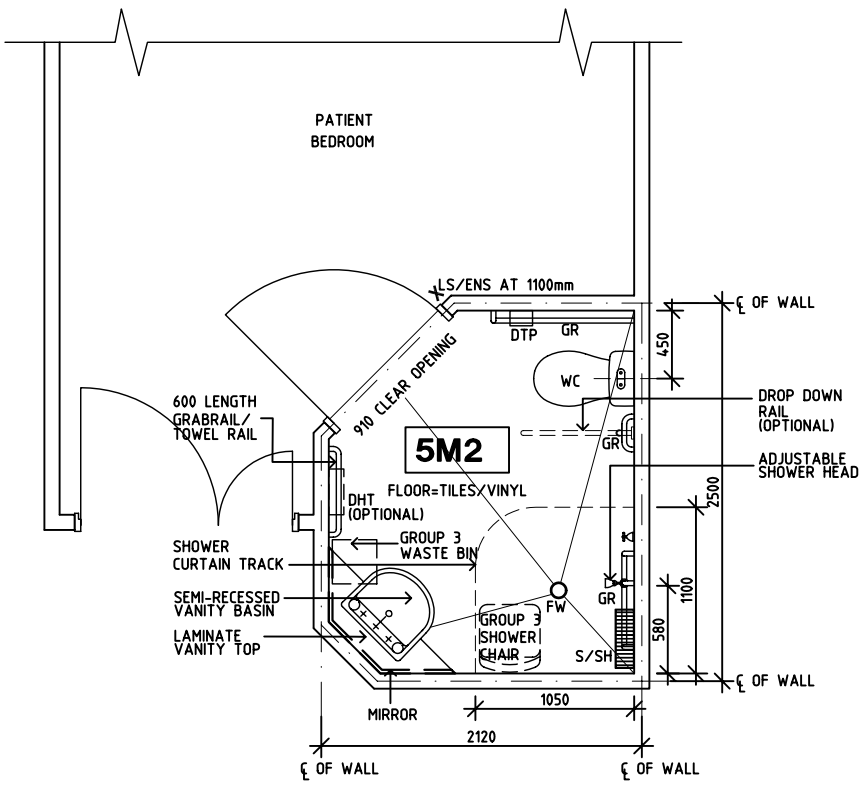

PLAN

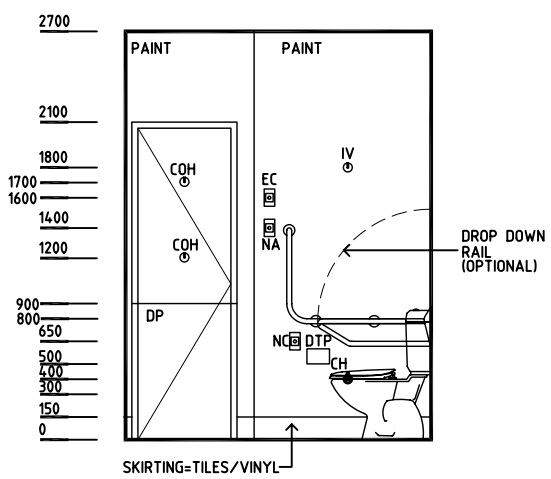

ELEVATION 1

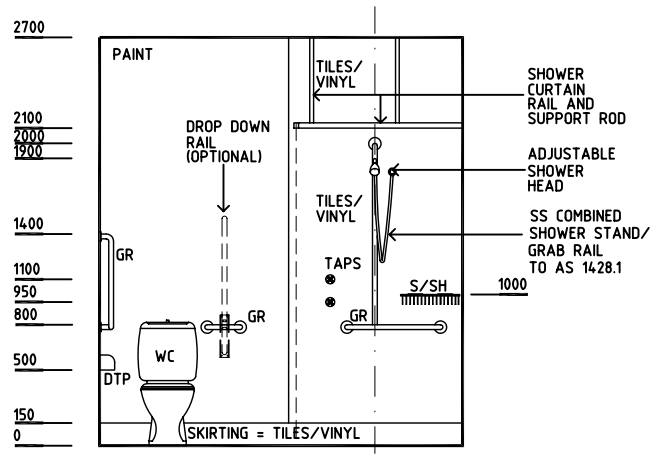

ELEVATION 2

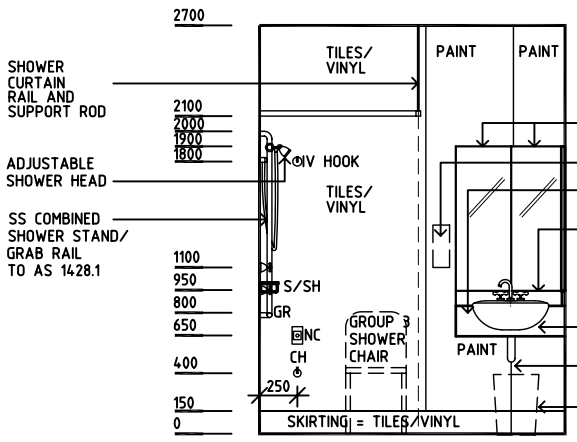

ELEVATION 3

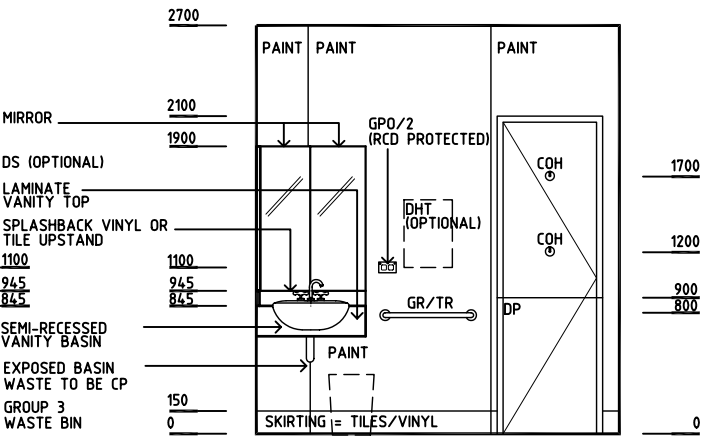

ELEVATION 4

REV	DESCRIPTION	DATE	BY	REV	DESCRIPTION	DATE	BY	REV	DESCRIPTION	DATE	BY
1	FIRST ISSUE	10.10.03	CC	4	GENERAL REVISIONS INCL NAME CHANGE	19.5.05	AL				
2	ROOM DIMENSION REVISED	27.10.03	AL								
3	GENERAL REVISIONS	14.2.05	CC								

NSW HEALTH

THE UNIVERSITY OF NEW SOUTH WALES

HPI

DESIGNED	APPROVED	SCALE(S)	ZONE(S)
CC/AL	DB	1:50 in A3	

CAD FILE NAME ENS-ST-A

PAPER DRAWING ID ENS-ST-A