NSW HFG STANDARD COMPONENTS

Room Layout Sheet

Room Name **Ensuite- Super**

RLS Room Code **ENS-SP-A**

RDS Room Code ENS-SP

CH	CATHETER HOOK
COH	COAT HOOK
CP	CHROME PLATED
DHT	DISPENSER - HAND TOWEL
DP	DOOR AND DOOR FRAME PROTECTION
DS	DISPENSER - SOAP
DTP	DISPENSER - TOILET PAPER
EC	EMERGENCY CALL
FW	FLOOR WASTE
GPO/2	GENERAL POWER OUTLET, DOUBLE
GR	GRAB RAIL
IV	IV HOOK
LS	LIGHT SWITCH
NA	NURSE ASSIST CALL
NC	PATIENT NURSE CALL
RCD	RESIDUAL CURRENT DEVICE
S/SH	SOAP AND SHAMPOO HOLDER
TR	TOWEL RAIL

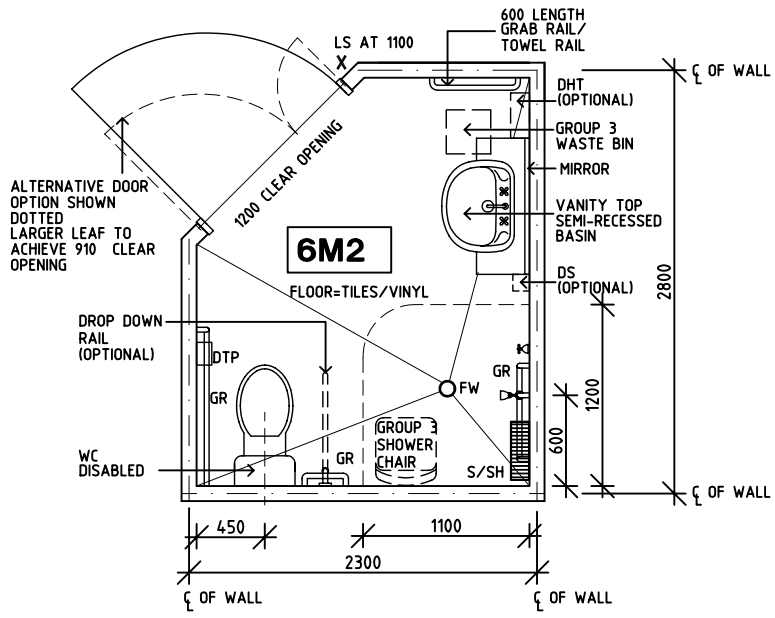

PLAN

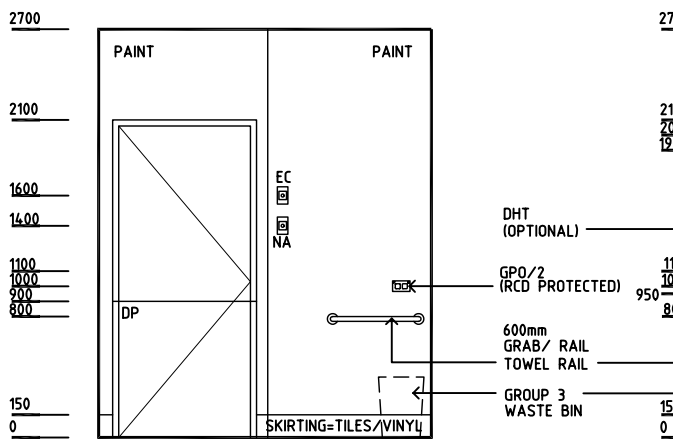

ELEVATION 1

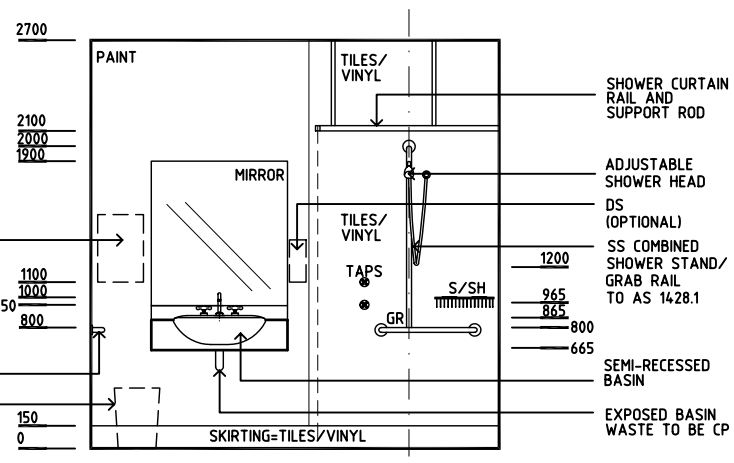

ELEVATION 2

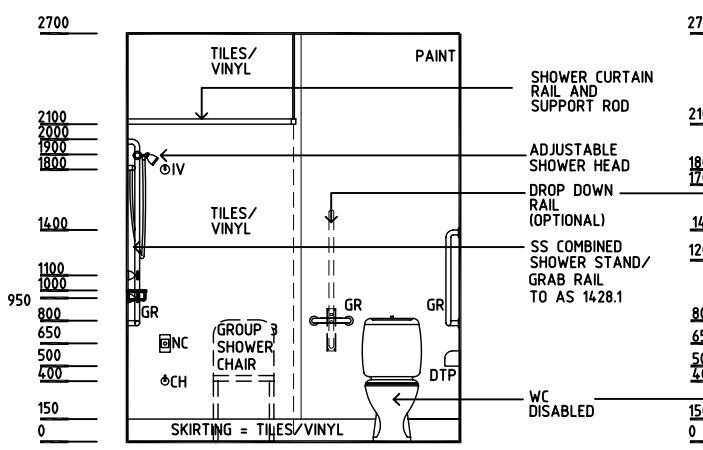

ELEVATION 3

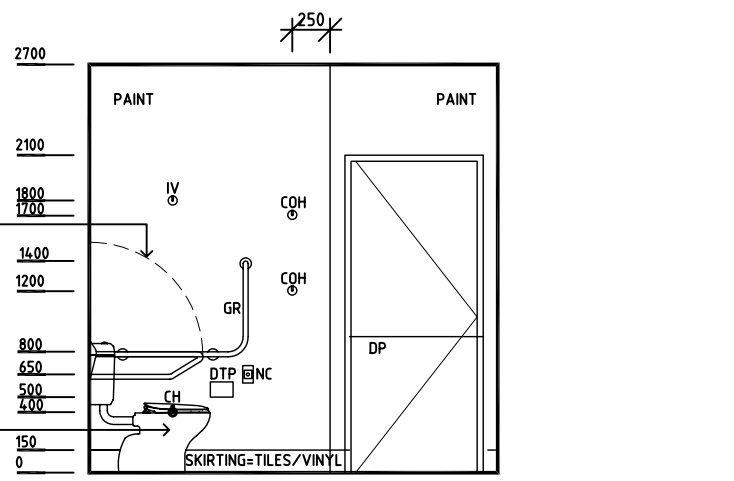

ELEVATION 4

REV	DESCRIPTION	DATE	BY	REV	DESCRIPTION	DATE	BY	REV	DESCRIPTION	DATE	BY
1	FIRST ISSUE	21.10.03	CC								
2	GENERAL REVISIONS	9.5.05	AL								
3	GENERAL REVISIONS INCL NAME CHANGE	19.5.05	AL								

NSW HEALTH

THE UNIVERSITY OF NEW SOUTH WALES

HPI

DESIGNED	APPROVED	SCALE(S)	ZONE(S)
CC/AL	DB	1:50 in A3	

CAD FILE NAME ENS-SP-A

PAPER DRAWING ID ENS-SP-A