NSW HFG STANDARD COMPONENTS

Room Layout Sheet

Room Name **Office - Consult**

RLS Room Code **OFF-CON**

RDS Room Code OFF-CON

AS	ADJUSTABLE SHELF
COH	COAT HOOK
COM/2	COMMUNICATION OUTLET - DOUBLE
DA	DURESS ALARM
DDG	DISPENSER - DISPOSABLE GLOVES
DHT	DISPENSER - HAND TOWEL
DP	DOOR AND DOOR FRAME PROTECTION
DS	DISPENSER - SOAP
DSA	DISPENSER - SOAP ANTISEPTIC
EC	EMERGENCY CALL
GPO/1	GENERAL PURPOSE OUTLET - SINGLE
GPO/2	GENERAL PURPOSE OUTLET - DOUBLE
GPO/2 EP	EMERGENCY POWER OUTLET - DOUBLE
GPO/C	GENERAL PURPOSE OUTLET - CLEANER'S
LS /R	LIGHT SWITCH -ROOM
LS /P	LIGHT SWITCH -PELMET TASK LIGHT
MSD	MEDICAL SERVICES DUCT
NA	NURSE ASSIST CALL
NC	PATIENT/ NURSE CALL
OP	OBSERVATION PANEL
PB	PINBOARD
RCD	RESIDUAL CURRENT DEVICE
SK4	FLOOR VINYL COVED SKIRTING
V1	VINYL FLOORING, STANDARD
XRV	X-RAY VIEWER

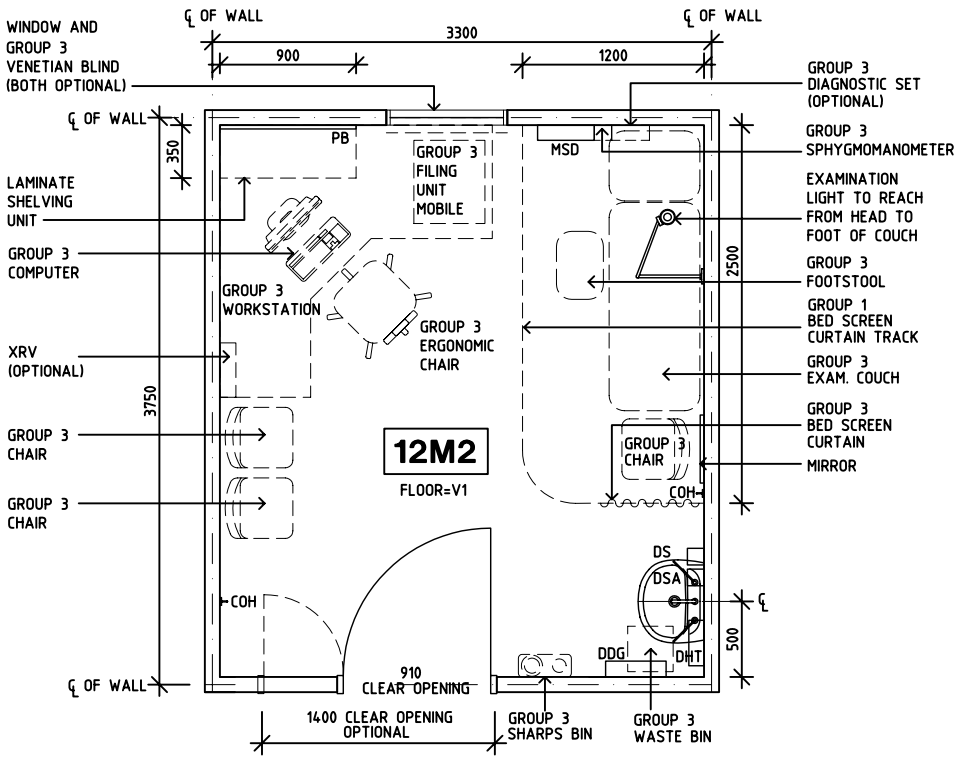

PLAN

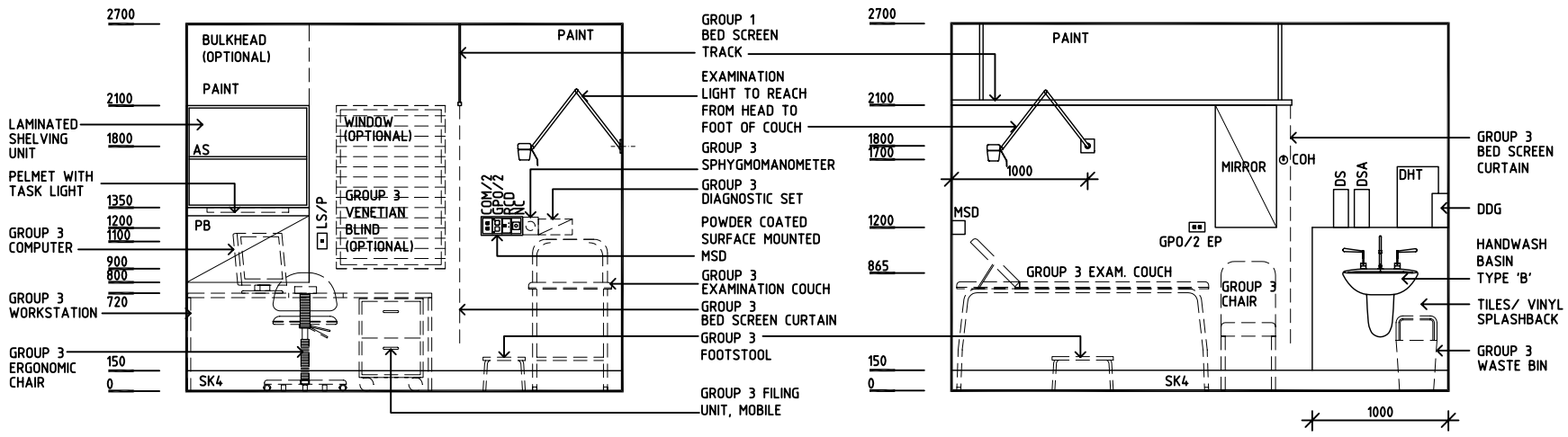

ELEVATION 1

ELEVATION 2

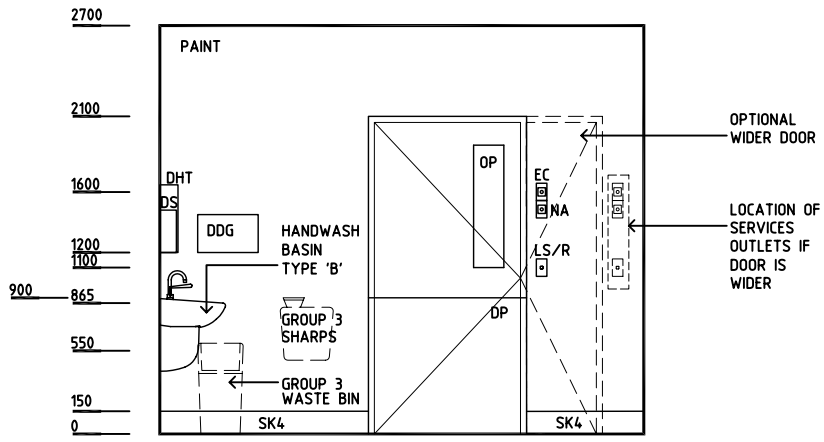

ELEVATION 3

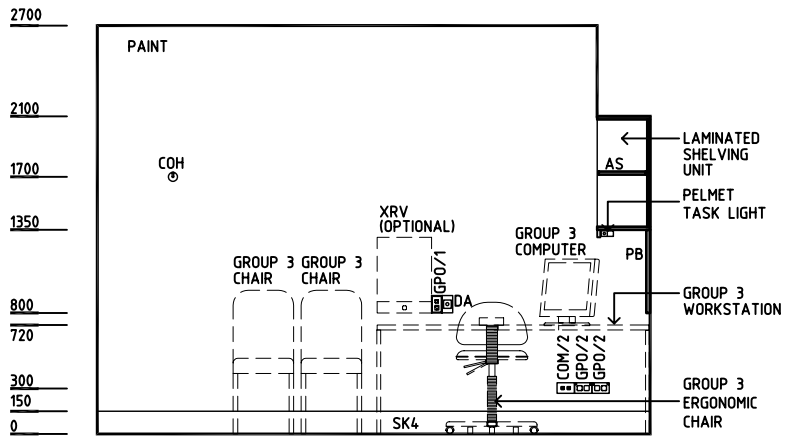

ELEVATION 4

REV	DESCRIPTION	DATE	BY	REV	DESCRIPTION	DATE	BY	REV	DESCRIPTION	DATE	BY
1	FIRST ISSUE	25.7.05	HS								
2	GENERAL REVISIONS	27.4.06	ADS								

NSW HEALTH

THE UNIVERSITY OF NEW SOUTH WALES

HPI

DESIGNED	APPROVED	SCALE(S)	ZONE(S)
CC/AL/JH	DB	1:50 in A3	

CAD FILE NAME OFF-CON

PAPER DRAWING ID OFF-CON